VIVISUN LED

The Complete Switch

High Reliability Full Spectrum
LED Lighted Pushbutton Switch

VIVISUN®™

See it. Believe it.™

Aerospace Optics, Inc.
3201 Sandy Lane, Fort Worth, Texas, 76112
Tel:1-888-VIVISUN
E-Mail:switches@vivisun.com
Website:http://www.vivisun.com

Data Sheet No. 12-2001-04 Rev. B

Ó 2002 Aerospace Optics, Inc.

VIVISUN LED

The Complete Switch™

High Reliability LED Lighted Switches

Life-of-the-Platform Service Life
Maintenance Free Operation
Low Power and Low Touch Temperature

Now with Voltage-Controlled Dimming
and a Spectrum™ of Sunlight Readable Colors

Designed, tested and qualified to MIL-PRF-22885/108
Listed on the Qualified Products List (QPL) 22885

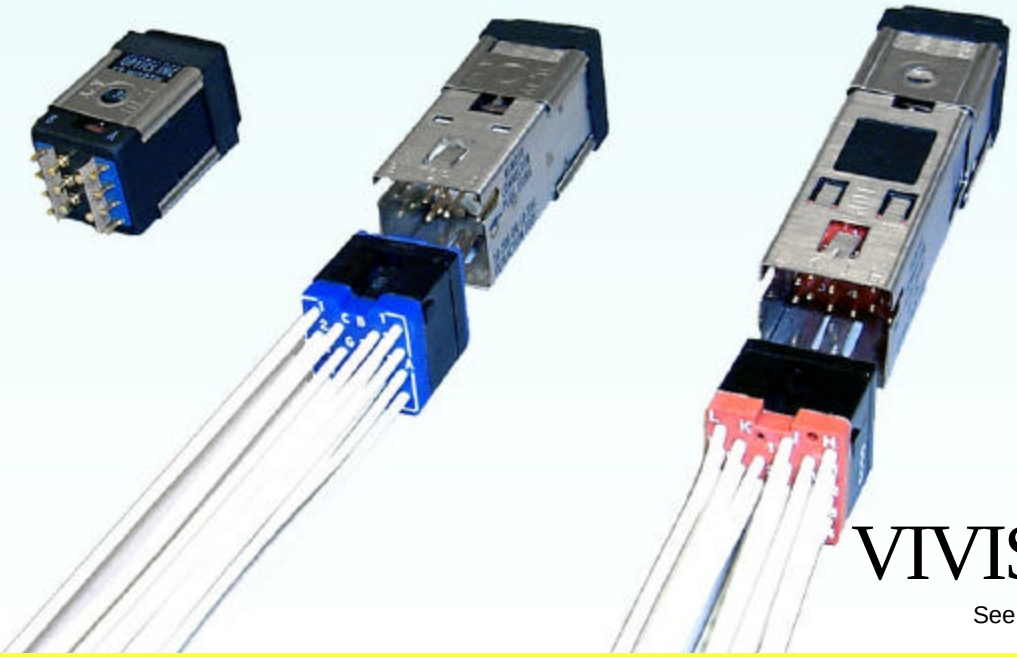

ISO 9001
DNV
DNV Certification, Inc.
REGISTERED FIRM

VIVISUN® ™
See it. Believe it.™

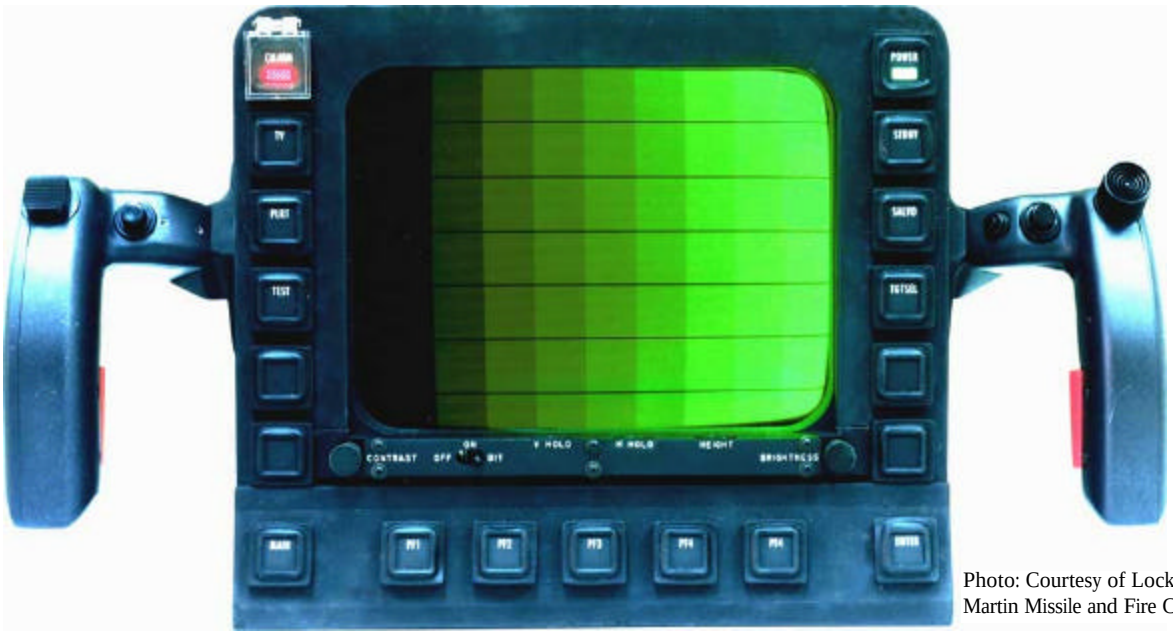

Photo: Courtesy of Lockheed Martin Missile and Fire Control

Design engineers in today's aerospace industry are faced with the challenge of designing performance oriented avionic systems with high reliability. In pursuit of this goal they have wanted to design out low reliability, failure prone incandescent lighting in favor of LED (Light Emitting Diode) lighting which has the advantage of high reliability. However, they had previously found that in using LEDs they had to sacrifice quality lighting and had to employ complex pulse width modulation techniques for uniform low level dimming. Aerospace Optics has responded to this need by developing a product to help these design engineers with their need for quality lighting, high reliability and simple voltage-controlled dimming in lighted pushbutton switches.

VIVISUN LED

The VIVISUN LED is an LED lighted pushbutton switch that combines the excellent sunlight readability our customers expect from VIVISUN products with the high reliability afforded by LEDs. This product was developed to solve the problems faced by our customers who have wanted LED reliability but have been unable to get LED reliability with high quality lighting. The VIVISUN LED high performance lighting provides sunlight readability exceeding the requirements of MIL-PRF-22885F, compliance with the NVIS requirements of MIL-L-85762A, voltage dimming and impressive uniformity and viewing angle. These advanced technology switches and indicators are setting new industry standards for LED lighting and these innovative switches are available only from Aerospace Optics, the technical leader in sunlight readable switches and indicators.

VIVISUN LED in Multifunction Displays

Electronic multifunction displays are being used in ground vehicles, on shipboard and in aircraft glass cockpits to display more and more instrumentation and control information. This has caused a reduction in the required numbers of individual pushbutton switches and indicators. However, there are many applications where lighted pushbutton switches are used to enhance electronic displays as shown in the photo above. In many cases these switches need a higher level of reliability and can be upgraded to VIVISUN LED switches which offer the highest reliability, lowest maintenance and best sunlight readability available.

The VIVISUN LED Advantage

Lighted pushbutton switches and indicators have customarily used incandescent lamps to achieve high brightness and sunlight readability. Since the lighting is produced by the heating of a lamp filament whose radiant emissions are primarily heat, there are many problems resulting in low reliability. This leads to high failure rates for incandescent lamps requiring constant relamping resulting in high maintenance throughout the service life of the aircraft.

In contrast, reliability has been the advantage for LEDs making them highly desirable and serving as the answer to low reliability lamps. However, previous LED lighting has been a big disappointment because of its failure to provide good lighting for sunlight readability, uniformity, viewing angle and could only be dimmed uniformly using pulse width modulation. So, in spite of all the problems, incandescent lamps have continued to be used because of the need for high brightness and simple voltage dimming.

The VIVISUN LED lighting advantage is that it eliminates the problems caused by incandescent lamps and it also solves the problems associated with LED lighting. The VIVISUN LED lighting completely obsoletes incandescent lighting and truly fulfills the expectations for reliable LED lighting. The VIVISUN LED is the low power, high reliability solution to sunlight readable, NVIS compliant lighted pushbutton switches and indicators.

The VIVISUN LED lighting eliminates the incandescent problems of high power consumption, high heat generation and high touch temperature by producing a brightness equivalent to incandescent while using less than half as much power. The poor reliability and high maintenance relamping problems associated with incandescent lamps are eliminated by using highly reliable, long life LEDs in a fault tolerant circuit design. LEDs are not susceptible to shock and vibration failures and do not have the high inrush current that incandescent lamps experience when energized. The VIVISUN LED lighting eliminates all of the incandescent lamp problems and still has high brightness, sunlight readability, viewing angle, uniformity, excellent color separation and is uniformly dimmable with voltage-controlled dimming.

Listed on QPL 22885, ISO 9001 Registered

The VIVISUN LED lighted pushbutton switches are fully qualified to MIL-PRF-22885/108 and listed on the Qualified Products List (QPL) 22885. Our Quality Assurance System is ISO 9001 registered and our test lab is DSCC certified. Aerospace Optics is committed to manufacturing high quality products and to ensuring total customer satisfaction by providing outstanding customer service and defect-free products with exceptional delivery and product value.

Sunlight Readable and Non-Ghosting

In complex glass cockpits, the workload and demand on the pilot is extensive and the possibility of misinterpreted annunciators cannot be tolerated. This has placed the sunlight readability of LED lighted switches and indicators at the highest priority. VIVISUN LED switches and indicators meet these requirements head on, providing unconditional sunlight readability even in the most demanding direct sunlight conditions.

VIVISUN LED lighted pushbutton switches and indicators are certified to meet the strict MIL-PRF-22885F requirements for sunlight readability. All VIVISUN LED standard colors have on to background contrasts greater than or equal to 0.6 in an ambient illumination of 10,000 foot-candles. This contrast is also certified for all glare producing angles up to and including 15°.

Another area of tremendous pilot concern is the possibility of "Ghost Legends" from unenergized displays. Direct sunlight can cause a false image to be reflected from an unlighted display, thus causing possible confusion and misinterpretation. The VIVISUN LED displays remain blacked out or "Dead Faced" when not energized and meet the MIL-PRF-22885F unlighted contrast requirement not to exceed the absolute value of 0.1 in an ambient illumination of 10,000 foot-candles.

Dead Face

Sunlight Readable

Specifiying VIVISUN LED means combining unrivaled sunlight readability with the cool, reliable, low power operation of LEDs.

NVIS Compliant *and* Sunlight Readable

Nighttime operations are now an integral part of military strategy. These operations have presented many new challenges, including the requirment to safely navigate and select ground targets using only the available starlight. To accomplish these objectives, crew members wear Night Vision Imaging System (NVIS) goggles which greatly enhance and multiply the effects of starlight. VIVISUN LED switches and indicators are ready to meet these new challenges by providing advanced cockpit lighting that is both NVIS compatible *and* sunlight readable.

Conventional lighted switches and indicators cannot be used in an aircraft involved in nighttime operations because they are not compatible with the NVIS goggles. Light from these incompatible displays will be greatly multiplied and interfere with the normal operation of the NVIS goggles. This interference degrades the sensitivity of the NVIS goggles, making them no longer capable of starlight operations. To address the issue of NVIS compatibility, MIL-L-85762A, "Lighting, Aircraft, Interior, Night Vision Imaging System (NVIS) Compatible," was written to define the requirements for all aircraft lighting that is to be used with the NVIS goggles.

To make displays compliant with the MIL-L-85762A requirements, sophisticated filtering must be used. Improperly designed filters can lead to a reduction in the brightness and sunlight contrast of the display. The VIVISUN LED provides NVIS compliant lighting without sacrificing sunlight readability.

MIL-L-85762A is no longer an active specification and in some cases is being replaced by MIL-STD-3009. Still, MIL-L-85762A is the source for the NVIS compliance requirements that are restated as guidelines in the Aircraft Lighting Handbook, JSSG-2010-5 and the Interface Document ASC/ENFC 96-01. VIVISUN LED switches are certified to meet the color, NVIS radiance and the minimum 0.4 lighted contrast requirements stated in the source document, MIL-L-85762A and MIL-STD-3009.

Wide Viewing Angle

The VIVISUN LED can be viewed clearly throughout a wide 60° cone, even when it is operated in direct sunlight.

Low Power Consumption

The high efficiency VIVISUN LED typically consumes only 1.18 watts at 28 volts, less than half the power of a typical 2.69 watt incandescent switch or indicator. VIVISUN LED switches and indicators also do not have the high inrush current of incandescent lamps which can be ten times the steady state current.

Low Touch Temperature

Less than one third of the energy emitted by an incandescent lamp is visible to the eye. The remaining two thirds is radiated as heat which can cause a significant rise in the face cap temperature. The face cap temperature can even reach a level that can cause pain or injury if touched without gloves.

The VIVISUN LED uses low power, solid state lighting that emits far more light than heat. This significantly lowers the face cap temperature compared to similar incandescent switches and indicators. In normal operation, the face cap temperature is only 48° C, which is barely perceptible to the touch.

Wide Operating Temperature Range

High performance military systems are expected to operate properly in a wide variety of climatic conditions. This is why the VIVISUN LED was designed and tested for operation from -40°C to +71°C.

High Reliability

Incandescent lamps used in lighted pushbutton switches and indicators are troublesome. Extensive research into the nature of lamp failures revealed numerous factors affecting lamp life. These factors include temperature, voltage, frequent on/off cycling and the vibration that is typical of high performance aircraft. Individually, these factors are significant but when combined the result is often unacceptably low lamp life.

The solid state circuitry used in the VIVISUN LED incorporates advanced design features for high reliabilty and low drive current. These advanced features result in a pushbutton cap calculated reliability per MIL-HDBK-217F, Notice 2 in excess of 125,000 hours. The design of the VIVISUN LED even includes fault tolerance to keep the display readable even if an LED failure should occur.

Single Common or Horizontally Split Commons

The standard VIVISUN LED provides four power inputs, one for each of the display quadrants and a single common shared by all four. The horizontal split common option provides two commons, one for the upper and one for the lower half of the display.

LED Polarity

LEDs are PN junction semiconductors that are inherently sensitive to polarity. The VIVISUN LED is available in either Common Cathode (positive seeking) or Common Anode (negative seeking) configurations, each having reverse polarity protection.

Reduced Number of Input Wires

Many lighted switches require connecting as many as six wires to illuminate the entire display which can increase wiring complexity and aircraft weight. The VIVISUN LED reduces the number of input wires by offering optional interconnections between display quadrants. For single legend displays, this feature means that the entire display can be illuminated with only two wires reducing wiring complexity and aircraft weight.

11 Sunlight Readable Colors

The VIVISUN LED is available in eleven sunlight readable colors. The sunlight readable legends are Type S per MIL-PRF-22885F and are dead faced in direct sunlight and fully sunlight readable when energized. Colors available are blue, green, white, yellow and red as standard colors and NVIS blue, NVIS green A, NVIS green B, NVIS white, NVIS yellow and NVIS red for use with the NVIS goggles.

Dripproof/Watertight/Splashproof

The VIVISUN LED 1 or 2 Pole, Type II and IV and 4 Pole Type VI enclosure designs meet the dripproof, watertight and splashproof requirements of MIL-PRF-22885F (paragraphs 4.7.20.1-3) and MIL-STD-108. The seal effectively prevents the leakage of water, sand and dust through the instrument panel.

Each Type II, Type IV and Type VI unit is supplied with a mounting sleeve, sealed mounting spacer, sealed mounting flange and sealed cap. The seal is made from ZZ-R-765 silicone rubber with a black matte finish.

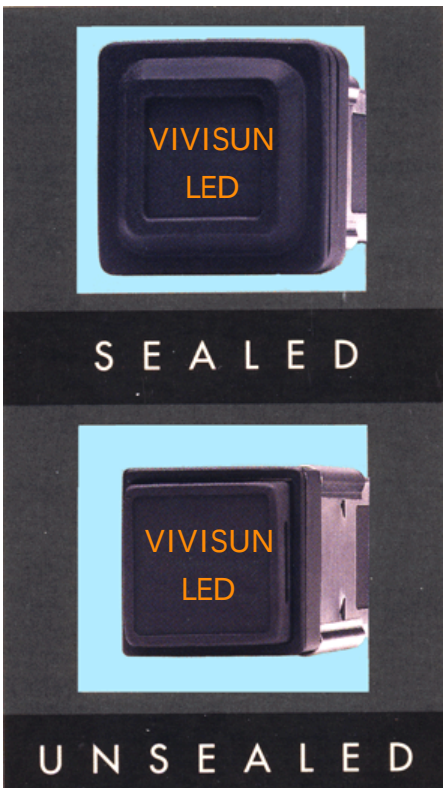

Lighted Legend, Visible White Displays

The VIVISUN LED displays are available with always visible white legends on an opaque black background. Type N displays per MIL-PRF-22885F have always visible white legends that illuminate at 0.5 to 3.0 foot-lamberts when energized at rated voltage and are available in white, red, NVIS green A, NVIS green B or NVIS white. Type D displays have always visible white legends that illuminate in color and in excess of 100 foot-lamberts at rated voltage and are only available in the standard colors blue, green, white, yellow or red.

Lighted Background Displays

The VIVISUN LED displays are available with legends that do not light but the background surrounding the legends light when energized. Type B displays are hidden legend type per MIL-PRF-22885F and when energized the legend appears black and the background illuminates in color and in excess of 200 foot-lamberts. Type A displays have always visible white legends on an obscure black background and when energized, the background illuminates in color and in excess of 200 foot-lamberts. Type W displays have visible black legends on a white background and when energized, the background illuminates in color and in excess of 100 foot-lamberts. Type W displays are only available in the colors blue, green, white, yellow or red.

Voltage-Controlled Dimming

The VIVISUN LED uses an advanced electrical circuit design which provides voltage-controlled dimming from daylight conditions to nighttime flying levels with a simple change in input voltage.

Uniformity

The VIVISUN LED is designed to provide display legibility second to none with an average character to character luminance uniformity better than 2:1 at full rated voltage.

Easy Installation

Each VIVISUN LED unit is supplied with a mounting spacer and a mounting sleeve for simple, effortless installation. No loose screws or cumbersome tools behind the panel to worry about. All retaining hardware for the VIVISUN LED is provided internally, allowing easy mounting from the front of the instrument panel.

VIVISUN LED Exclusive Solderless QUIK-CONNECT™ Module

Since avionics hardware is seldom installed at the same time as its associated wiring harness, systems engineers are often faced with the inability to check correct component wiring until after the final connection is completed. Only the VIVISUN LED from Aerospace Optics offers a solution to these problems with the QUIK-CONNECT™ Common Termination System (CTS) connector.

Our exclusive QUIK-CONNECT™ module makes wiring quick, easy and environmentally sealed. All electrical strands are crimped into standard MIL-C-39029/22-192 contact sockets then inserted into the module using a M81969/14-10 insertion/removal tool. Modules may be pre-wired to the harnesses since the module is physically separate from the switch itself. Individual wires and contacts may be checked for correct continuity, thus the likelihood of accidental miswiring when connected to the VIVISUN LED is all but eliminated.

Installation is very easy. Mating the QUIK-CONNECT™ module with the switch requires no tools and takes only a few seconds. The keyed module prevents orienation errors and is simply pressed into place until locked. To remove, insert the Aerospace Optics extraction tool (P/N 18-234) into the slots at the top and bottom of the module. Push to release the snap tabs in the switch housing and gently pull the connector free.

No soldering. Easy, bench testable wiring. Quick connect/disconnect times. Only the VIVISUN LED offers this ultimate in convenience and time saving wire termination system. Aerospace Optics' commitment to advanced connector design has made possible the first ever use of CTS technology for lighted pushbutton switches and indicators.

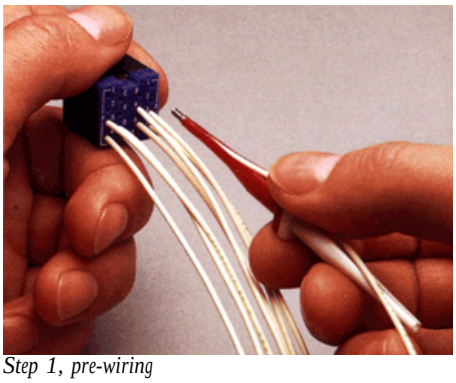

Step 1, pre-wiring

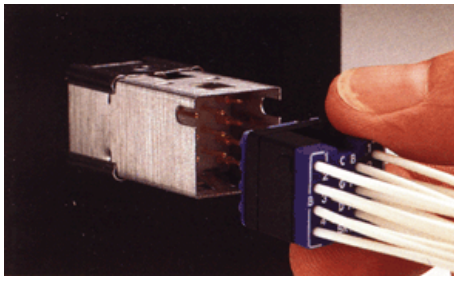

Step 2, installation

RTCA/DO-160D Electrical Compliance

The VIVISUN LED is compliant with the severe electrical and electromagnetic environments specified in RTCA/DO-160D for the categories listed on page 8.

EMI/RFI Attenuation

When the EMI option is specified, VIVISUN LED switches meet the MIL-PRF-22885F paragraph 3.38 requirement for shielding attenuation not less than 60dB over the frequency range from 100 to 1000MHz when tested as specified in paragraph 4.7.33.2.

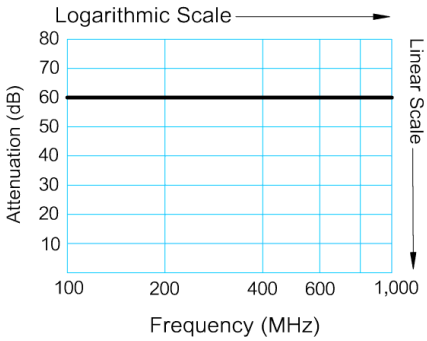

For Ordering Assistance
Call 1-888-VIVISUN
e-mail:switches@vivisun.com
Website: www.vivisun.com

TECHNICAL DISCUSSIONS

Measurement and Certification of Sunlight Readability

All Aerospace Optics VIVISUN LED displays are readable in direct sunlight. Certification of sunlight readability is performed by photometrically determining the contrast for each legend by using the specular reflectance test method outlined in MIL-PRF-22885F, paragraph 4.7.36.

The test method uses a light source of 3000° K to 5000°K which is first placed at a +15° angle of incidence to a white barium sulfate standard. A photometer is placed at a -15° angle of reflection to the barium sulfate standard. The light source is used to illuminate the barium sulfate so as to produce 10,000 foot-candles as measured by the photometer. The barium sulfate standard is then replaced by the viewing surface of the display, keeping the same incident and reflective angles of both the light source and the photometer (see Figure A).

Using this test configuration the luminance of the legend, both illuminated and nonilluminated, plus that of the adjacent background area are measured when subjected to 10,000 foot-candles of illumination. Three luminance readings per character are taken. These measurements are then used to calculate the average contrast for each character. The contrast is calculated from the following equations:

$$\text{ON/BACKGROUND contrast } C_L = \frac{B_2 - B_1}{B_1}$$

$$\text{OFF/BACKGROUND contrast } C_{UL} = \frac{B_3 - B_1}{B_1}$$

where:
C_L = Lighted legend contrast
C_{UL} = Unlighted legend contrast
B_1 = Average background luminance
B_2 = Average character luminance, lighted
B_3 = Average character luminance, unlighted

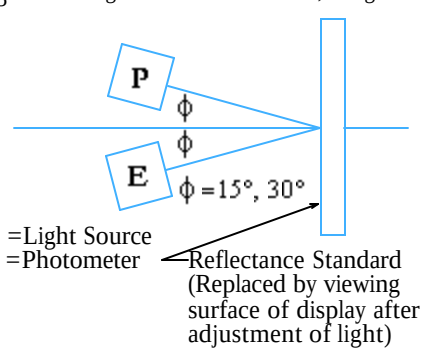

Figure A

After the 15° contrast data has been collected, the test is then repeated using a +30° angle of incidence and a -30° angle of reflection. As with the 15° test, the light source is first adjusted to produce 10,000 foot-candles illumination using a barium sulfate standard and then the barium sulfate standard is replaced with the display surface. The ON/BACKGROUND and OFF/BACKGROUND contrast data using the 30° test method is then collected on each legend character.

The average contrast values using the 15° and 30° test methods meet the minimum ON/BACKGROUND contrast values shown in Figure 17. In either test method the absolute value of the OFF/BACKGROUND contrast value shall not exceed 0.1.

NVIS Compatibility

The spectral response of the NVIS goggles to radiant energy is fundamentally different from the human eye. The peak photopic response of the eye is in the yellow-green region of the spectrum while the peak response of the gallium-arsenide photocathode of the NVIS goggles is in the near infrared (see Figure 14). NVIS compatible lighting is possible only by maximizing the radiant energy of the switch or indicator in those wavelengths most sensitive to the eye while minimizing the radiant energy that is most sensitive to the NVIS goggles.

As can be seen from Figure 14, there are two NVIS classes specified in MIL-L-85762A. The difference between the Class A NVIS and the Class B NVIS is a long wave pass interference filter that has been deposited on the objective lens of the goggle. The Class A NVIS is the most sensitive due to its extended response from the near infrared into the visible region of the spectrum and is primarily used in helicopters. The Class B NVIS has less response to visible light and is primarily used in fast jets equipped with full-color electronic displays.

Conventional incandescent and LED cockpit lighting contains considerable energy in the red and near infrared region of the spectrum. This energy contributes little or no brightness as perceived by the human eye but to the NVIS this energy is enormous. This incompatible energy enters the NVIS either directly or as a reflection from the windscreen causing a veiling glow or halo. This glow interferes with the NVIS, desensitizing it and making it ineffective to view outside imagery. To avoid interference, cockpit lighting must be compatible with the spectral response characteristics of the NVIS goggles.

Compatible lighting incorporates special filters that suppress the display's residual energy in the deep red and near infrared portion of the spectrum. Only after this energy is suppressed can the display be properly evaluated to the compatibility requirements defined in MIL-L-85762A as referenced in JSSG-2010-5, ASC/ENFC 96-01 or MIL-STD-3009.

Measurement and Certification of NVIS Compliance

Compliance of Aerospace Optics VIVISUN LED displays to the requirements of MIL-L-85762A is certified by spectroradiometry. NVIS radiance units (NR) are calculated using radiometric data for the NVIS blue, NVIS green A, NVIS green B, NVIS white, NVIS yellow and NVIS red color displays. The test procedure for measuring the spectral radiance of these displays is in accordance with MIL-L-85762A, paragraph 4.8.14 and is performed as follows:

A display to be certified as NVIS compatible is first set to an average luminance of 15 foot-lamberts. The display is then analyzed between the wavelengths of 450nm and 930nm using a computer controlled spectroradiometer. A spectral radiance curve of the display is generated by the spectroradiometer, with units of the curve being watts/cm^2-nm-sr. Once the spectral radiance data is collected, it must be scaled to the required luminance level for analysis, multiplied by the appropriate standard response curve of the NVIS goggles as specified in MIL-L-85762A and the absolute goggle response factor of 1mA/W. In doing this, a quantitative value is derived which is termed NVIS Radiance units (NR).

The certification of a NVIS blue, NVIS green A, NVIS green B or NVIS white display requires the NR calculation to be performed using the standard Class A response curve at a display luminance of 0.1 foot-lamberts. In order to achieve this, the spectroradiometric scan at 15.0 foot-lamberts must have each term multiplied through by a scaling factor in order to make the relative luminance level 0.1 foot-lamberts. The formula used for calculating the NR value of NVIS blue, NVIS green A, NVIS green B or NVIS white displays is the following mathematical procedure:

$$NR = G(\lambda)_{max} \int_{450}^{930} G_A(\lambda) S N(\lambda)\, d\lambda$$

S=Scaling Factor=L_r/L_m= 0.1/15 =.00667
where:
L_r = required luminance level for NR measurement (0.1 foot-lamberts)
L_m = measured luminance (15 foot-lamberts)
NR = NVIS Radiance units
$G_A(\lambda)$ = relative Class A NVIS response
$N(\lambda)$ = spectral radiance of lighting component(W/cm^2-nm-sr)
$G(\lambda)_{max}$ = 1mA/W
$d\lambda$ = wavelength increment (5nm)

Using this method the maximum Class A NR units must be calculated to be less than $1.7X10^{-10}$ for NVIS blue, NVIS green A or NVIS green B displays and less than $1.0X10^{-9}$ for NVIS white displays to be considered NVIS compliant.

The certification of a Class A NVIS yellow requires the NR calculation to be performed using the standard Class A response curve at a display luminance of 15 foot-lamberts. Since the spectral radiance data was collected at 15 foot-lamberts and the required luminance is 15 foot-lamberts, the scaling factor would be 1. The formula used to calculate the NR for Class A NVIS yellow is as follows:

$$NR = G(\lambda)_{max} \int_{450}^{930} G_A(\lambda) S N(\lambda)\, d\lambda$$

$$S = \text{Scaling Factor} = L_r / L_m = 15/15 = 1$$

All other values in this expression are the same as represented in the formula for NVIS blue, NVIS green A, NVIS green B or NVIS white. For a Class A NVIS yellow to be considered compliant, the Type I, Class A NR units must be between $0.5X10^{-7}$ and $1.5X10^{-7}$ NR.

The certification of a Class B NVIS yellow or Class B NVIS red requires the NR calculation to be performed using the standard Class B response curve at a display luminance of 15 foot-lamberts. Since the spectral radiance data was collected at 15 foot-lamberts and the required luminance is 15 foot-lamberts, the scaling factor would be 1. The formula used to calculate the NR for a Class B NVIS yellow or Class B NVIS red is as follows:

$$NR = G(\lambda)_{max} \int_{450}^{930} G_B(\lambda) S N(\lambda)\, d\lambda$$

where:

$G_B(\lambda)$ = relative Class B NVIS response

All other values in this expression are the same as represented in the formula for Class A NVIS yellow. For a Class B NVIS yellow or Class B NVIS red to be considered compliant, the Type I, Class B NR units must be between $0.47X10^{-7}$ and $1.4X10^{-7}$ NR.

VIVISUN LED NVIS compatible displays are also certified for chromaticity compliance to MIL-L-85762A spectroradiometrically.

Chromaticity compliance is confirmed by collecting spectroradiometric data at the specified luminance level of 0.1 foot-lamberts for NVIS blue, NVIS green A, NVIS green B and NVIS white and 15.0 foot-lamberts for Class A NVIS yellow, Class B NVIS yellow and NVIS red. The u′ and v′ chromaticity coordinates are determined, substituted into the following equation and then solved for r. If r is less than or equal to the specified value of r for the color specified, then the color conforms to the specification requirements. The test procedure for measuring NVIS blue, NVIS green A, NVIS green B, NVIS white, Class A NVIS yellow, Class B NVIS yellow and NVIS red displays shall be in accordance with MIL-L-85762A, paragraphs 4.8.12 and 4.8.13 respectively.

$$(u'-u'_1)^2 + (v'-v'_1)^2 \le (r)^2$$

where:

u', v' = 1976 UCS chromaticity coordinates of the test article.

u'_1, v'_1 = 1976 UCS chromaticity coordinates of the center point of the colors specified below.

r = radius of the allowable circular area on the 1976 UCS chromaticity diagram for the specified color.

Color	u'_1	v'_1	r	luminance
NVIS Blue	.082	.390	.037	0.1 ft-L
NVIS Green A	.088	.543	.037	0.1 ft-L
NVIS Green B	.131	.623	.057	0.1 ft-L
NVIS White	.190	.490	.040	0.1 ft-L
NVIS Yellow	.274	.622	.083	15.0 ft-L
NVIS Red	.450	.550	.060	15.0 ft-L

Aerospace Optics maintains in-house facilities qualified to make the above measurements and all others necessary to certify compliance to MIL-L-85762A.

Pushbutton Cap

The VIVISUN LED pushbutton cap contains all of the LEDs, optics and electronic circuitry necessary for legend display, voltage dimming and circuit protection. Electronically, the pushbutton cap is broken down into four completely separate quadrant Driving, Dimming, and Protection Circuits (DDPC) with no shared components. This approach greatly enhances reliability by reducing the possibility that a component failure would affect more than one display quadrant. The fault tolerant design keeps the quadrant readable even if an LED failure occurs. Mechanically, the pushbutton cap is interchangeable with existing Aerospace Optics 95 Series incandescent pushbutton caps and uses the same MIL-PRF-22885/108 QPL listed switch body.

Voltage-Controlled Dimming

The VIVISUN LED has been designed to allow smooth and uniform luminance trimming using voltage adjustment techniques. Typical voltage dimming ranges applicable to civilian aircraft are shown in Figure 18 and those for non-NVIS military aircraft are shown in Figure 19. The typical voltage dimming ranges for NVIS applications are shown in Figure 20. For applications employing a regulated voltage source, the VIVISUN LED pushbutton caps are interchangeable with existing incandescent pushbutton caps.

However, since the VIVISUN LED consumes less power than an equivalent incandescent pushbutton cap, luminance control circuits using series current limiting resistors or rheostats will need to be recalibrated before using the VIVISUN LED. The actual resistance value needed will depend upon the desired luminance level and the total number of switches to be dimmed.

Maintenance Free Operation

Unlike incandescent pushbutton caps which require routine replacement of lamps, the VIVISUN LED is designed to provide years of trouble-free operation. Each VIVISUN LED pushbutton cap is completely self contained and sealed with no removable component parts and requires no routine maintenance.

Mil Spec Qualified and QPL 22885 Listed

The VIVISUN LED has been designed, tested and qualified to the requirements of the military specification MIL-PRF-22885/108 and the NVIS requirements of MIL-L-85762A. The product is QPL approved and is listed on the Qualified Products List (QPL) 22885. In addition the VIVISUN LED has been tested and certified compliant with the magnetic, electrical, electromagnetic and ESD environments specified in RTCA/DO-160D for the categories listed on page 8.

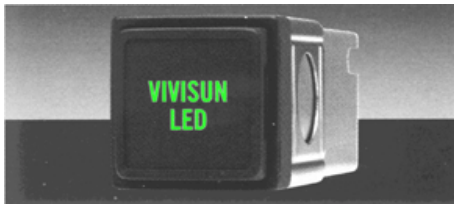

Low Power Consumption

The VIVISUN LED incorporates advanced, high efficiency LEDs that significantly reduce system power requirements.

Voltage	Typical VIVISUN LED	Typical Incandescent
28VDC	1.18 Watt	2.69 Watt

Low Touch Temperature

The VIVISUN LED touch temperature is under the 120° F maximum allowed by MIL-STD-1472.

Voltage	Typical VIVISUN LED	Typical Incandescent
28VDC	119° F	165° F

High Reliability

Mean Time to Failure (MTTF) is calculated per MIL-HDBK-217F, Notice 2. Reliability numbers are for the lighted pushbutton cap only and are provided as a comparison between VIVISUN LEDs and incandescent lamps.

Voltage	Typical VIVISUN LED	Typical Incandescent
28VDC	125,000 hours	2,500 hours

SPECIFICATIONS

The VIVISUN LED illuminated pushbutton switches are qualified to MIL-PRF-22885/108, are listed on the Qualified Products List (QPL) 22885 and meet the electrical requirements of RTCA/DO-160D.

MECHANICAL FEATURES:

TYPE I CONFIGURATION:

The Type I pushbutton switch configuration provides low weight, minimum length and a variety of solder terminals.

Packaging Dimensions: The Type I switch assembly physical dimensions and configuration conform to Figure 1. Dimensions are in inches. Tolerances are ±0.03" for two place decimals and ±0.010" for three place decimals.

Lowest Weight: 19 grams (0.67 ounces) maximum including mounting sleeve and mounting spacer.

Minimum Length: Overall length is 1.310" less terminals. The behind panel depth is 1.093" maximum excluding terminals. See Figure 1 for length of terminals.

Enclosure Design: Unsealed.

Housing Material and Finish: Aluminum, black anodized.

Solder Terminations: The Type 1 configuration is available in three solder terminal styles: turret terminals, spade terminals or wire wrap/pcb terminals.

TYPE III CONFIGURATION:

The Type III pushbutton switch assembly is comprised of a pushbutton lens cap, a switch body having one or two switch poles (single or double break), a panel mounting spacer and a reversible mounting sleeve.The switch body accepts an easy to install 2 Pole QUIK-CONNECT™ plug which is designed as a solderless common termination system (CTS).

Packaging Dimensions: The Type III switch assembly physical dimensions and configuration conform to Figure 2. Dimensions are in inches. Tolerances are ±0.03" for two place decimals and ±0.010" for three place decimals.

Low Unit Weight: 26 grams (0.92 ounces) maximum including mounting sleeve and spacer, less connector plug.

2 Pole QUIK-CONNECT™ Plug Weight: 6 grams (0.21 ounces) maximum.

Length: Overall length is 2.00" including connector. The behind the panel depth is 1.78", the shortest available for any switch having a common termination system.

2 Pole QUIK-CONNECT™ Plug: The 2 Pole QUIK-CONNECT™ plug is not supplied with the Type III pushbutton switch assembly. It is ordered separately as Aerospace Optics P/N 18-200 (includes Aerospace Optics P/N 18-215 sealing plugs).

Enclosure Design: Unsealed.

Housing Material and Finish: Stainless steel.

Wiring the QUIK-CONNECT™ Plug: The connector is wired like a common termination system but remains a removable connector.

Solderless Termination: MIL-C-39029/22-192 sockets crimped onto 20, 22 or 24 gauge wire without soldering.

Loading Wires: Wires with the MIL-C-39029/22-192 sockets crimped on are inserted and extracted from the QUIK-CONNECT™ plug by use of a M81969/14-10 tool.

Mating the QUIK-CONNECT™ Plug: No tool is necessary to plug the connector into the housing but an extraction tool, Aerospace Optics P/N 18-234, is required to unplug the connector.

TYPE V CONFIGURATION:

The Type V pushbutton switch assembly is comprised of a pushbutton lens cap, a switch body having four switch poles (single or double break), a panel mounting spacer and a reversible mounting sleeve.The switch body accepts an easy to install 4 Pole QUIK-CONNECT™ connector plug which is designed as a solderless common termination system (CTS).

Packaging Dimensions: The Type V switch assembly physical dimensions and configuration conform to Figure 3. Dimensions are in inches. Tolerances are ±0.03" for two place decimals and ±0.010" for three place decimals.

Low Unit Weight: 38 grams (1.34 ounces) maximum including mounting sleeve and spacer, less connector plug.

4 Pole QUIK-CONNECT™ Plug Weight: 6 grams (0.21 ounces) maximum.

Length: Overall length is 2.75" including connector. The behind the panel depth is 2.53" and is the shortest available for any 4 pole switch having a common termination system (CTS).

4 Pole QUIK-CONNECT™ Plug: The 4 Pole QUIK-CONNECT™ plug is not supplied with the Type V pushbutton switch assembly. It is ordered separately as Aerospace Optics P/N 18-240 (Includes Aerospace Optics P/N 18-215 sealing plugs).

Enclosure Design: Unsealed.

Housing Material and Finish: Stainless steel.

Wiring the QUIK-CONNECT™ Plug: The connector is wired like a common termination system but remains a removable connector.

Solderless Termination: MIL-C-39029/22-192 sockets crimped onto 20, 22 or 24 gauge wire without soldering.

Loading Wires: Wires with the MIL-C-39029/22-192 sockets crimped on are inserted and extracted from the QUIK-CONNECT™ plug by use of a M81969/14-10 tool.

Mating the QUIK-CONNECT™ Plug: No tool is necessary to plug the connector into the housing but an extraction tool, Aerospace Optics P/N 18-234, is required to unplug the connector.

FIGURE 1

TYPE I UNSEALED SWITCH DIMENSIONS

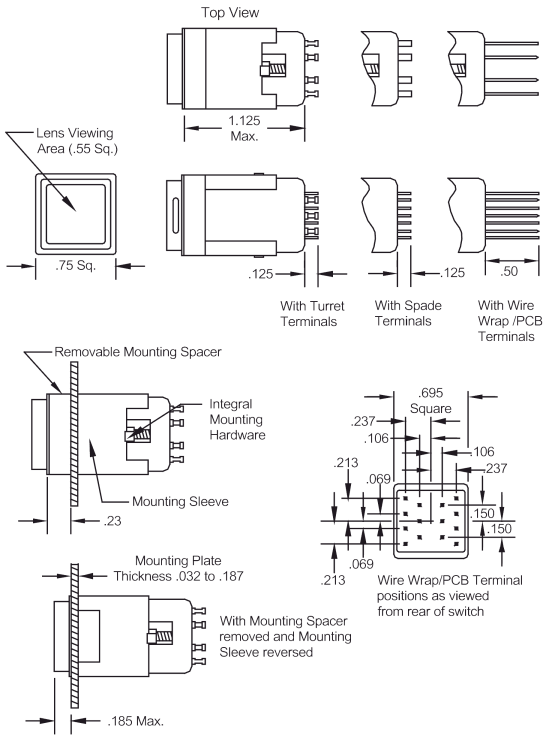

FIGURE 2

TYPE III UNSEALED SWITCH DIMENSIONS

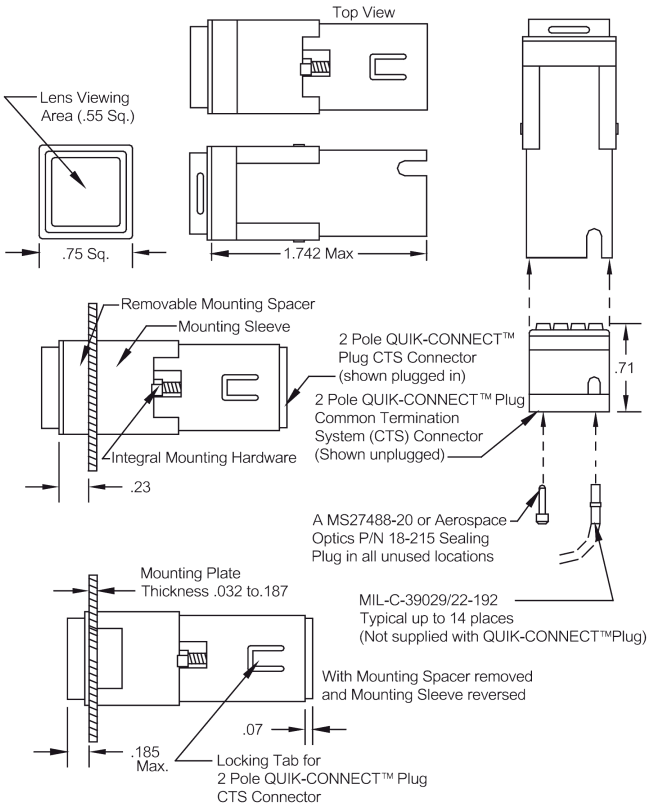

TYPE I, TYPE III AND TYPE V CONFIGURATIONS:
The Type I, Type III and Type V pushbutton switch configurations offer several mechanical features common to these types.
Mechanical Life: 100,000 cycles. Tested for 10,000 cycles at -40°C, 20,000 cycles at +71°C and 70,000 cycles at +25°C.
Pushbutton Action: Momentary, Alternate or Indicator (Indicators are only available in Type I, Type II, Type III or Type IV).
Operating Characteristics:
Actuation travel: 0.150" ±0.031".
Actuation force: 2 to 5 pounds.
Strength of Actuator: 25 pounds static load.
Pushbutton Lens Cap: The pushbutton lens cap serves as the display module for the pushbutton switch assembly and is illuminated by non-replaceable LEDs permanently mounted within the pushbutton cap. See Figure 4.
Pushbutton Cap Extraction Force: 2 to 5 pounds.
Keying: Pushbutton cap is designed to prevent incorrect insertion. See Figure 4.
Pushbutton Cap Captivation: To prevent accidental interchange during mounting, the pushbutton caps are held captive to the switch housing by means of a metallic retainer which is permanently mounted in the switch housing. See Figure 4.
Removal of Pushbutton Cap: Caps may be changed, if need be, by popping the cap pins out of the retaining element rails and replacing with another cap.
Panel Mounting Spacer: A panel mounting spacer is supplied with each unit so as to place the switch mounting flange flush with a 0.235" thick edgelighted panel. For other switch applications the spacer is discarded.
Mounting Sleeve: A reversible mounting sleeve is supplied with each unit so as to be usable with or without the panel mounting spacer.
Mounting Plate Thickness: The mounting sleeve allows the switch to be installed on mounting plates ranging from 0.032" to 0.187" thick.
Mounting Cutout Dimensions: See Figure 5.
Front Mounting: The switch assembly is mounted from the front of the mounting plate by means of a screwdriver only. All mounting screws are integral to the switch.
Mounting the Switch: Using the extraction slots, pull the pushbutton cap fully out of the switch body and allow the cap to rotate 90° where it is held by the retaining element as shown in Figure 4. Remove the mounting sleeve and insert the switch body into the mounting plate cutout. Then, from behind the mounting plate, slide the mounting sleeve onto the switch body. Tighten the two screws inside the switch body until the integral mounting hardware pulls the mounting sleeve up tight against the mounting plate using typically 18 inch-ounces of torque. The pushbutton cap is then reinserted and the QUIK-CONNECT™ plug can be plugged into the switch housing. A side view of a properly mounted switch is shown in Figure 1, Figure 2 and Figure 3.

ENVIRONMENTAL CONDITIONS:

Temperature: Operating: -40°C to +71°C
Nonoperating: -40°C to +71°C
Thermal Shock: In accordance with MIL-STD-202, method 107, test condition A, except -40°C to +71°C.
Altitude: Sea level to 50,000 ft.
Shock: In accordance with MIL-STD-202, method 213, test condition B, 75'Gs.
Vibration: In accordance with MIL-STD-202, method 204, test condition B, (10-2,000Hz).
Moisture Resistance: In accordance with MIL-STD-202, method 106 as modified by MIL-PRF-22885F.
Fungus: In accordance with MIL-STD-454, requirement 4.
Salt Spray: In accordance with MIL-STD-202, method 101, test condition A.
Explosion: In accordance with MIL-STD-202, method 109.

DO-160D ELECTRICAL ENVIRONMENTAL CONDITIONS:

Magnetic Effect: In accordance with Section 15, equipment Class A.
Power Input: In accordance with Section 16, Category Z (28VDC) Normal 18VDC to 30.3VDC, Normal Surge 12VDC to 50VDC, Undervoltage 10VDC, Abnormal 20.5VDC to 32.2VDC and Abnormal Surge to 80VDC.
Voltage Spike: In accordance with Section 17, Category A, 600 volt spikes.
Audio Frequency Conducted Susceptibility: In accordance with Section 18, Category Z.
Induced Signal Susceptibility: In accordance with Section 19, Categories C & Z.
Radio Frequency Susceptibility (Radiated and Conducted): In accordance with Section 20, Category R, high energy radiated fields (HERF) conducted susceptibility 20 V/m, 10 kHz to 400 MHz and radiated susceptibility 20 V/m, 0.1 GHz to 0.4 GHz and 150 V/m (Pulse) 0.4 GHz to 8 GHz.
Emission of Radio Frequency Energy: In accordance with Section 21, Category M conducted RF interference 150 kHz to 30 MHz and radiated RF interference, 2 MHz to 6 GHz.
Lightning Induced Transient Susceptibility: In accordance with Section 22, Category A3XX, waveform 3, 600V/24A and waveform 4, 300V/60A.
Electrostatic Discharge (ESD): Immune to electrostatic discharge, withstanding the 15,000 volt pulse requirements of Section 25 for Category A equipment.

FIGURE 3
TYPE V FOUR POLE UNSEALED SWITCH DIMENSIONS

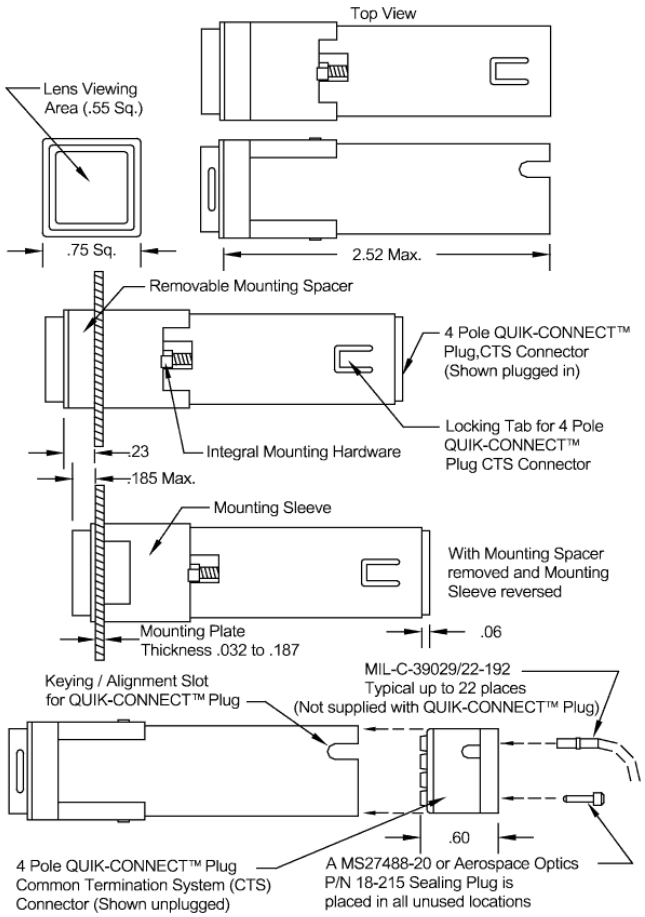

FIGURE 4
UNSEALED SWITCH PUSHBUTTON LENS CAP AND RETAINER

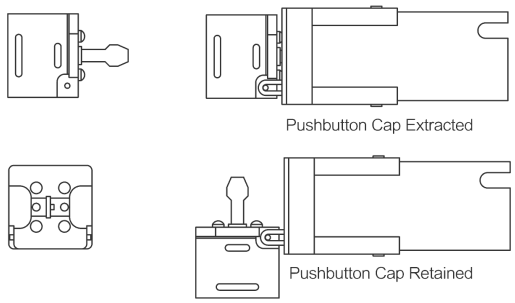

FIGURE 5
MOUNTING PLATE CUTOUT DIMENSIONS
TYPE I, TYPE III AND TYPE V UNSEALED SWITCHES

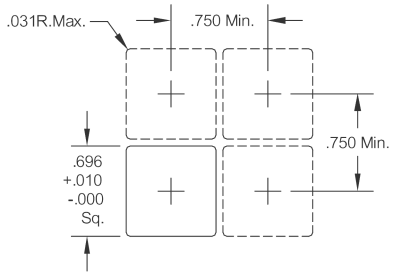

DRIPPROOF, WATERTIGHT, SPLASHPROOF SEALED SWITCHES:

Type II Configuration: The Type II switch assembly is a sealed pushbutton switch comprised of a Type I switch body, a sealed pushbutton cap, a seal mounting flange with attatched gasket, a panel mounting spacer with attached gasket and a reversible mounting sleeve.

Type IV Configuration: The Type IV switch assembly is a sealed pushbutton switch comprised of a Type III switch body, a sealed pushbutton cap, a seal mounting flange with attached gasket, a panel mounting spacer with attached gasket and a reversible mounting sleeve.

Type VI Configuration: The Type VI switch assembly is a sealed pushbutton switch comprised of a Type V switch body, a sealed pushbutton cap, a seal mounting flange with attached gasket, a panel mounting spacer with attached gasket and a reversible mounting sleeve.

Packaging Dimensions: The Type II, Type IV and Type VI switch assembly dimensions and configurations conform to Figure 6. Dimensions are in inches. Tolerances are ±0.03" for two place decimals and ±0.010" for three place decimals.

Low Unit Weight: 21 grams (0.75 ounces) maximum for Type II, 28 grams (0.99 ounces) maximum for Type IV and 41 grams (1.45 ounces) maximum for Type VI including mounting flange, panel spacer and mounting sleeve, less connector plug.

Panel Mounting Spacer: A panel spacer is supplied and is used only when mounting through an edgelighted panel, otherwise discard.

Mounting Flange and Spacer Material: Themoplastic, UL-94-VO matte black finish and silicone rubber per ZZ-R-765 for the attached gasket.

Sealed Pushbutton Caps: The pushbutton caps are supplied with an integral rubber seal which is permanently attached to the cap. See Figure 6.

Seal Material: The seal material is silicone rubber per ZZ-R-765. The surface has a matte black finish.

Mounting Cutout Dimensions: See Figure 6.

Installing Sealed Pushbutton Caps: After the switch assembly is properly mounted, the sealed pushbutton cap is installed by first pushing the cap all the way down to its fully retained position. To seal the cap onto the seal mounting flange, press a lower corner of the seal into the lower flange corner using firm finger pressure. Next, press each of the remaining corners of the seal into their respective flange corners. Follow by pressing each of the four sides into the seal mounting flange. The seal is then secured into the mounting flange by firmly pressing all previously pressed areas and smoothing any bulges by additional pressure.This will insure proper seal to mounting flange integrity.

Enclosure Design: When properly installed, the sealing will meet the requirements for dripproof, watertight and splashproof sealed enclosure designs.

Dripproof Sealing: The sealed switches do not allow any leakage of water though the seal when subjected to the dripproof sealing test defined in MIL-PRF-22885F, paragraph 4.7.20.3 and MIL-STD-108.

Watertight Sealing: The sealed switches do not allow any leakage of water through the seal when subjected to the watertight sealing test defined in MIL-PRF-22885F, paragraph 4.7.20.2 and MIL-STD-108.

Splashproof Sealing: The sealed switches do not allow any leakage of water through the seal when subjected to the splashproof sealing test defined in MIL-PRF-22885F, paragraph 4.7.20.1 and MIL-STD-108.

Sand and Dust: The sealed switches meet the sand and dust sealing test defined in MIL-PRF-22885F, paragraph 4.7.26.

High Impact Shock: When specified, the sealed indicators and momentary action sealed switches meet the high impact shock test defined in MIL-PRF-22885F, paragraph 4.7.16.2 Method II.

ELECTRICAL FEATURES:

Electrical Life: 50,000 cycles minimum at rated loads at +71°C ambient temperature.

Switch Contacts: Available in silver with gold flash or gold plate.

Switch Contact Ratings:

SILVER CONTACTS WITH GOLD FLASH

	Load	Single break	Double Break
28VDC @ sea level	Resistive	7.5 amp	4.0 amps
	Inductive	4.0 amp	2.0 amps
	Motor	4.0 amps	-
	Lamp	1.0 amps	-
28VDC @ 50,000 ft.	Resistive	4.0 amp	3.0 amps
	Inductive	2.5 amps	1.0 amps
115VAC, 60 HZ. @ sea level	Resistive	7.5 amps	-
	Inductive	4.0 amps	-

GOLD PLATED CONTACTS

	Load	Single Break	Double Break
28VDC @ sea level	Resisitive	1.0 amps	-
	Inductive	0.5 amps	-
28VDC @ 50,000 ft.	Resistive	1.0 amps	-
	Inductive	0.5 amps	-

Switch Type: The basic snap action switches are qualified to MIL-PRF-8805/101 catergory I or category II.

Switch Capacity: Single pole double throw, double pole double throw or four pole double throw.

Switch Contact Schematic: The switch contact arrangements are either single break or double break. The double break allows two separate contact circuits or simply a single throw contact action. See Figure 7.

FIGURE 6

TYPE II, TYPE IV AND TYPE VI SEALED SWITCH DIMENSIONS

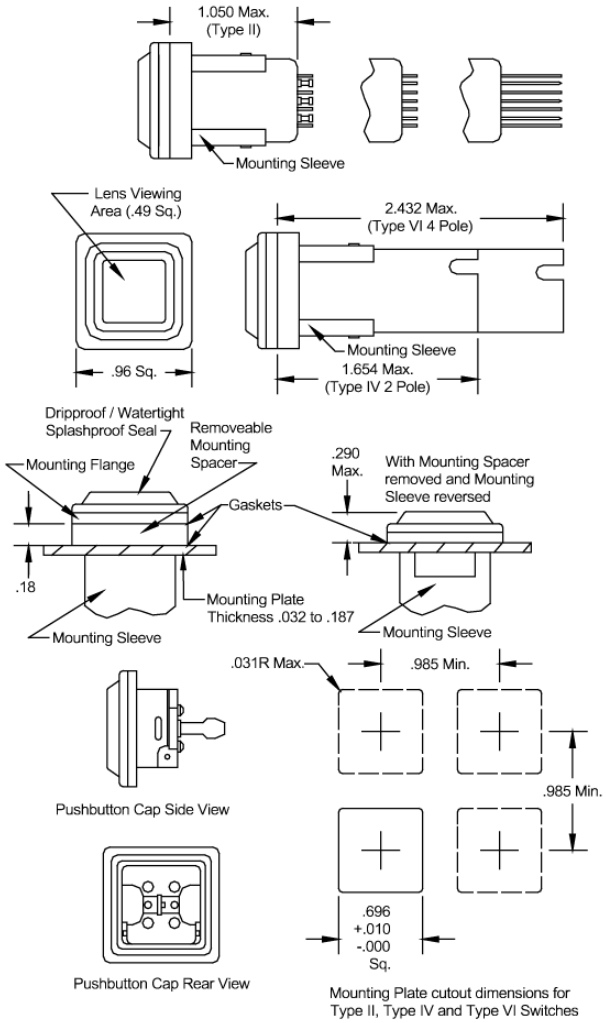

FIGURE 7

SWITCH CONTACT IDENTIFICATION AND CIRCUIT SCHEMATIC

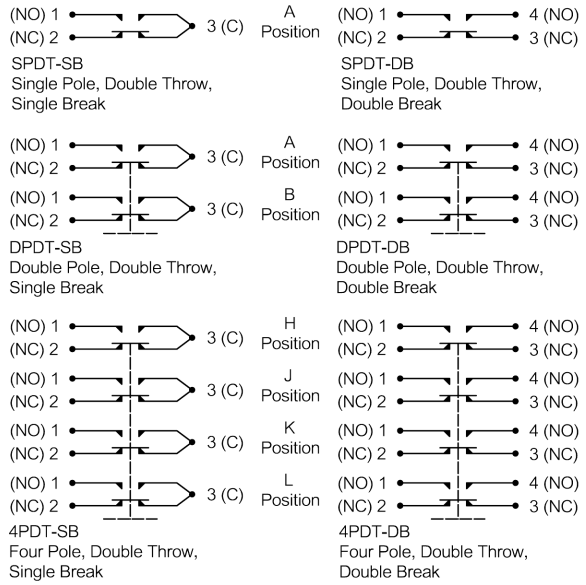

Switch Contact Resistance: 0.025 ohms maximum for silver with gold flash contacts.
Intermediate Current: The intermediate current test per MIL-PRF-22885F paragraph 3.35 is applicable to the gold flash silver contacts. 50,000 cycles minimum, 12,500 cycles at -40°C, 25,000 cycles at +23°C and 12,500 cycles at +71°C.
Low Level Life: The low level life test per MIL-PRF-22885F paragraph 3.36 is applicable to the gold plated contacts. 50,000 cycles with contacts loaded at 30 millivolts maximum DC or peak AC at 10 milliamperes maximum. 12,500 cycles at -40°C, 12,500 cycles at +23°C and 25,000 cycles at +71°C.
Dielectric Withstanding Voltage:
At sea level: 1000 volts rms minimum, 60 Hz.
At 50,000 ft.: 400 volts rms minimum, 60 Hz.
Pushbutton Cap Display Styles: The pushbutton cap display is available in five versions, a four way split screen, a horizontal split screen, two three way split screens and a full screen display. See Figure 8.
LED Circuit Configurations: Each pushbutton cap contains 16 LEDs, 4 per quadrant, and all the electronics necessary for display illumination. The LED circuit is either a single circuit with one common, G (Style 1) or it is a horizontal split circuit with two commons, G and F (Style 2). Each quadrant has its own I/O labeled A, B, C, and D according to the quadrant it illuminates. Each quadrant has its own independent electronic circuit consisting of 4 LEDs and the Driver, Dimming and Protection Circuit (DDPC) needed for their operation. The LED circuit can be either 28 VDC common anode (current sinking) or 28 VDC common cathode (current sourcing). Polarity is referenced with respect to commons G and F. See Figure 9.
Quadrant Interconnection Circuit Styles: To reduce the number of input wires necessary to illuminate the display, the pushbutton cap is available with the quadrants A, B, C and D internally connected in various circuit styles so one input wire can activate one or more quadrants as shown in Figure 10.
Switch and LED Terminal Identification: The switch poles are denoted as position A for the single pole version, A and B for the two pole version and H, J, K and L for the four pole version. Switch contact terminals are marked 1, 2, 3 and 4. LED terminals are marked A, B, C, D, F and G. See Figure 11.
Power Consumption: The typical power consumption of the LED illuminated pushbutton cap at 23°C is 1.18 watts for 28 VDC units.
EMI/RFI Shielding Option: When specified, the shielding efficiency of the pushbutton switch is no less than 60dB for frequencies from 100MHz to 1000MHz.

FIGURE 8
PUSHBUTTON CAP DISPLAY STYLES

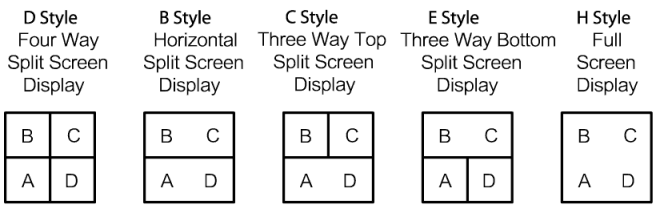

Quadrants are labeled A, B, C and D as viewed from the front of the display.

FIGURE 9
PUSHBUTTON CAP LED CIRCUIT DIAGRAMS, VOLTAGE AND POLARITY

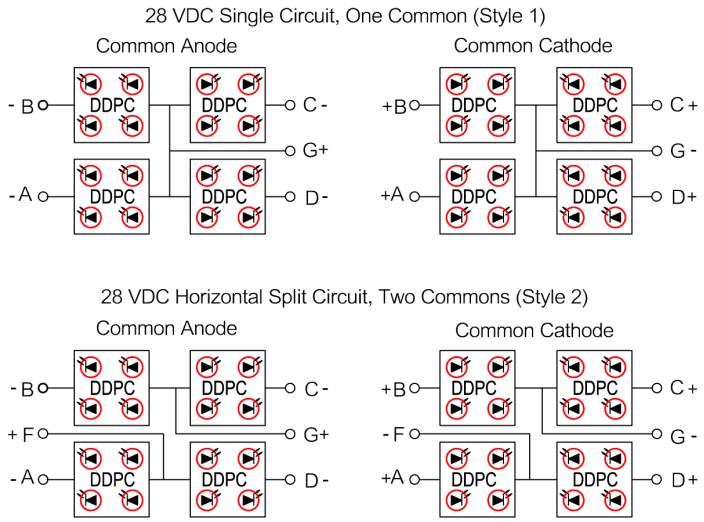

Diagrams are as viewed from the front of the display.

FIGURE 10
PUSHBUTTON CAP QUADRANT INTERCONNECTION CIRCUIT STYLES

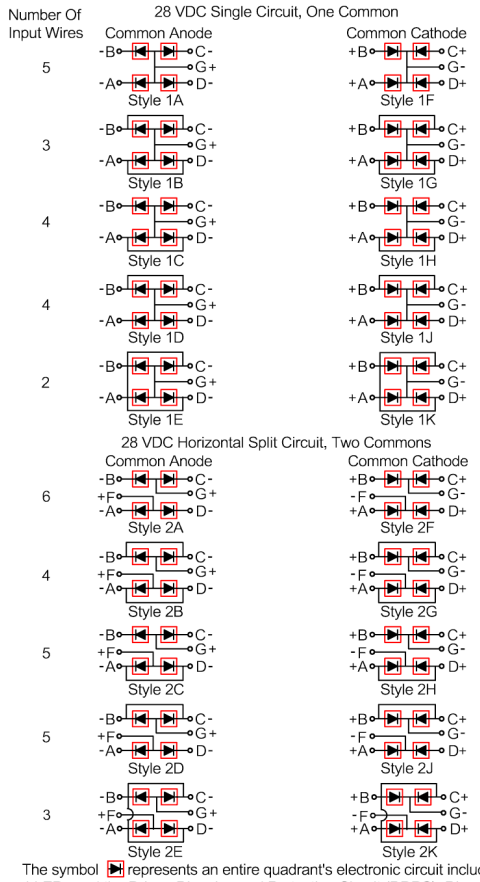

The symbol represents an entire quadrant's electronic circuit including 4 LEDs and the Driver, Dimming and Protection Circuit (DDPC). Diagrams are as viewed from the front of the display.

FIGURE 11
SWITCH BODY AND LED TERMINAL IDENTIFICATION (BACK VIEW)

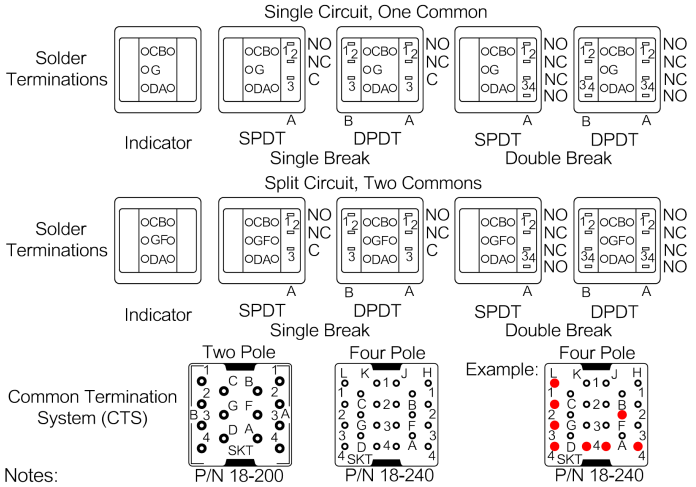

Notes:

1. A and B identify the switch pole positions for the one pole and two pole versions and H, J, K and L identify the switch pole positions for the four pole version.
2. The switch contact terminals are identified as 1, 2, 3 and 4.
3. A, B, C and D identify the LED quadrant inputs and G and F identify the commons.
4. "SKT" identifies the socket side where input wires are inserted.
5. All solderless CTS QUIK-CONNECT™ plugs are supplied with sealing plugs P/N 18-215 or MS27488-20 which must be inserted into the unused locations. Example: A 4 pole, single break, single circuit pushbutton switch utilizing only 3 poles will require 8 sealing plugs (see example above), 1 each in location 1, 2, 3 and 4 of the unused switch pole L,1each in location 4 of the 3 active poles H, J and K and in location F of the LED circuit.

VISUAL FEATURES:

DISPLAY CHARACTERISTICS:

Display Illumination: The VIVISUN LED display legends are illuminated by solid state, LED (Light Emitting Diode) technology. The LEDs are arranged in a matrix array of 16 LEDs with 4 LEDs per quadrant for high reliability and exceptional luminance uniformity.

Chrominance and Luminance: The display legends are available in five standard colors whose chromaticity limits are shown in Figure 12. Typical 1931 CIE chromaticity coordinates and luminance values at full rated voltage are:

Color	Chromaticity x	Chromaticity y	Luminance Foot-Lamberts
Blue	0.143	0.178	300
Green	0.321	0.659	400
White	0.349	0.356	450
Yellow	0.586	0.413	400
Red	0.680	0.317	300

Four Separate Message Capability: Since each quadrant can be controlled individually a single pushbutton cap can display up to four separate messages, all in different colors.

Viewing Angle: The standard color displays have a wide viewing angle of 60° to the normal of the display viewing surface (120° included angle) in sunlight and 30° included angle in glare producing angles of direct sunlight conditions.

Uniformity: The average character to character uniformity is 2:1 at 28VDC.

Uniformity Color to Color: The average luminance uniformity from color to color is 3:1 and is maintained when dimmed to 14VDC using voltage dimming.

NVIS COMPATIBILITY:

NVIS Compliant: When specified, the VIVISUN LED display lighting is compatible with NVIS (Night Vision Imaging System) goggles and complies with the NVIS color and NVIS radiance requirements defined in MIL-L-85762A as referenced in JSSG-2010-5 and ASC/ENFC 96-01 and defined in MIL-STD-3009.

NVIS Colors: The NVIS compliant lighting is available in six colors; NVIS blue, NVIS green A, NVIS green B, NVIS white, NVIS yellow and NVIS red. The NVIS blue, NVIS green A and NVIS white display chromaticity coordinates are within the areas bounded by a circle for blue, green A and white and a circle and the spectrum locus for green B as shown in Figure 13 when set to 0.1 foot-lamberts. The NVIS yellow and NVIS red display chromaticity coordinates are within the area bounded by a circle and the spectrum locus as shown in Figure 13 when set to 15.0 foot-lamberts.

Chromaticity Coordinates: Typical 1976 CIE UCS chromaticity coordinates when set to the stated luminance levels are:

Color	Chromaticity u′	Chromaticity v′	Luminance Foot-Lamberts
NVIS Blue	0.087	0.384	@ 0.1
NVIS Green A	0.089	0.555	@ 0.1
NVIS Green B	0.130	0.578	@ 0.1
NVIS White	0.184	0.486	@ 0.1
NVIS Yellow Class A	0.221	0.566	@ 15.0
NVIS Yellow Class B	0.262	0.560	@ 15.0
NVIS Red	0.405	0.539	@ 15.0

NVIS Response Curves: There are two NVIS response curves. The Class A uses a 625 nm minus blue filter which does not allow any red cockpit lighting. The Class B which uses a 665 nm minus blue filter which does allow the use of properly designed NVIS red lighting. Figure 14 shows the Class A and Class B relative response curves as compared to the photopic relative response curve.

NVIS Radiance: The NVIS compliant lighting meets the following MIL-L-85762A NVIS radiance requirements when set to the stated luminance levels.

Color	NVIS Radiance Maximum	NVIS Radiance Minimum	NVIS Type / Class	Luminance Foot-Lamberts
NVIS Blue	≤1.7E-10	none	Type I Class A	@ 0.1
NVIS Green A	≤1.7E-10	none	Type I Class A	@ 0.1
NVIS Green B	≤1.7E-10	none	Type I Class A	@ 0.1
NVIS White	≤1.0E-9	none	Type I Class A	@ 0.1
NVIS Yellow Class A	≤1.5E-7	≥0.5E-7	Type I Class A	@ 15.0
NVIS Yellow Class B	≤1.4E-7	≥0.47E-7	Type I or II Class B	@ 15.0
NVIS Red	≤1.4E-7	≥0.47E-7	Type I or II Class B	@ 15.0

Spectral Radiance, Type I Class A Colors: Figure 15 shows the normalized spectral radiance curves for the Type I Class A colors of NVIS blue, NVIS green A, NVIS green B, NVIS white and NVIS yellow Class A. Also shown are the relative photopic response and the relative spectral response of the Class A NVIS. These are the only colors that are allowed in a Class A cockpit.

Spectral Radiance, Type I Class B Colors: Figure 16 shows the normalized spectral radiance curves for the Type I Class B colors of NVIS yellow Class B and NVIS red, the relative photopic response and the spectral response of the Class B NVIS. The NVIS red is allowed in a Class B cockpit in addition to NVIS blue, NVIS green A, NVIS green B, NVIS white and NVIS yellow Class B.

SUNLIGHT READABILITY:

Display Type S: The Type S VIVISUN LED displays per MIL-PRF-22885F have an opaque black background with indiscernible legends until illuminated. When illuminated the legends appear in color and are sunlight readable.

Sunlight Readable Legends: When energized at rated voltage the display legends are readable in 10,000 foot-candles of direct sunlight including any glare producing angle up to 15° to the normal of the viewing surface. When the display is not energized the legends are hidden and cannot be read in direct sunlight.

Sunlight Readability Test Method: Contrast measurements are made in accordance with MIL-PRF-22885F paragraph 4.7.36 using the test arrangement therein described as Figure 10, "Specular Reflectance Test for Sunlight Readability" and shown herein as Figure A in the "Technical Discussions".

Contrast: The display contrast values meet or exceed the minimum contrast requirements of MIL-PRF-22885F paragraph 3.41 wherein:

Contrast $C_L \geq 0.6$ for lighted legends to background, standard colors
Contrast $C_L \geq 0.4$ for lighted legends to background, NVIS colors
and $|C_{UL}| \leq 0.1$ for unlighted legends to background, all colors

The minimum contrast values for each color and the minimum average display luminance at full rated voltage are shown in Figure 17.

FIGURE 12
CHROMATICITY COORINATES

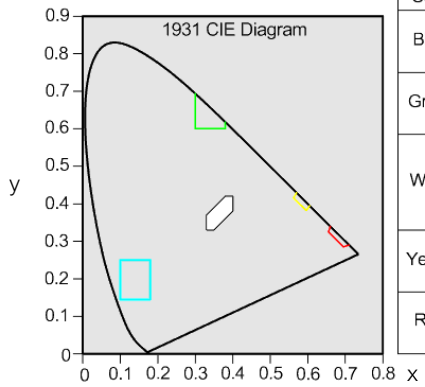

Color	x 1/	y 1/
Blue	.100 .180 .180 .100	.145 .145 .250 .250
Green	.300 .300 .380 .380	SL 2/ .600 .600 SL 2/
White	.330 .350 .400 .400 .380 .330	.330 .330 .380 .420 .420 .370
Yellow	.562 .570 .596 .605	.415 SL 2/ .382 SL 2/
Red	.695 .710 .655 .660	.285 SL 2/ .325 SL 2/

1/ Chromaticity is expressed as x and y on the CIE chromaticity diagram. Values shown are corners of the limiting envelope.
2/ SL - Spectrum Locus (where intersected by other coordinate).

FIGURE 13
NVIS CHROMATICITY COORDINATES

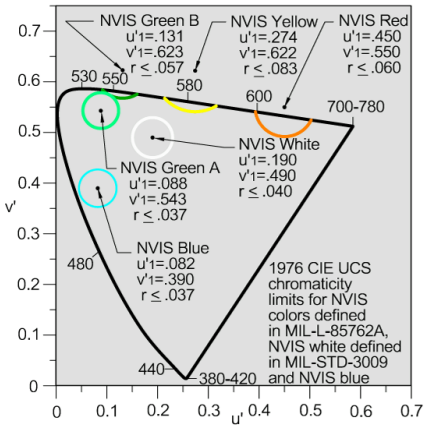

FIGURE 14
PHOTOPIC, CLASS A NVIS AND CLASS B NVIS RELATIVE RESPONSE

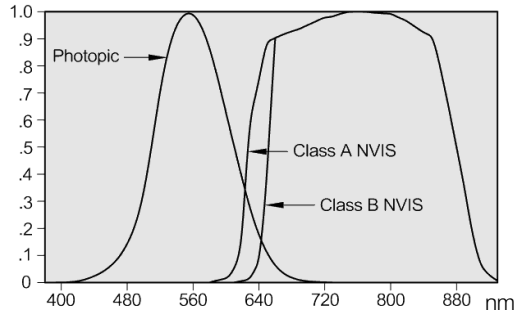

FIGURE 15
NORMALIZED SPECTRAL RADIANCE FOR TYPE I CLASS A NVIS COLORS

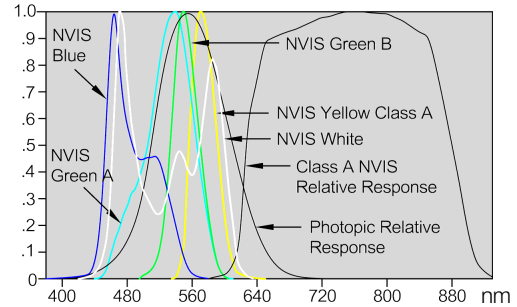

VISIBLE LEGEND DISPLAYS:

Visible White Legends: The VIVISUN LED displays are available with translucent visible white legends with illuminating characters on an opaque black background.

Display Type N, Luminance and Color: The Type N displays per MIL-PRF-22885F have visible white legends that are reflective white and are always visible in any ambient light except darkened conditions. When the ambient is reduced to darkened conditions the visible white legends can be energized and produce an average luminance between 0.5 and 3.0 foot-lamberts at rated voltage. This type of display is available with legends illuminated in one of five colors: white, red, NVIS green A, NVIS green B or NVIS white.

Display Type D, Luminance and Color: The Type D displays have white, always visible legends that can be energized to produce an average luminance in excess of 100 foot-lamberts at rated voltage. This type of display is typically used in shipboard applications and is only available in the standard colors blue, green, white, yellow or red.

BACKGROUND ILLUMINATING DISPLAYS:

Background Illumination: The VIVISUN LED displays are available with background illuminating legends wherein the legends do not light but the backgrounds surrounding the legends light up when the display is eneregized.

Display Type B, Luminance and Color: The Type B displays per MIL-PRF-22885F are hidden legend having black legends on an obscure black background. When illuminated the legend appears black and the background appears in color.The display is readable in daylight and does not appear energized in the unlighted mode. Although the contrast requirements do not apply the average luminance exceeds 200 foot-lamberts. These displays are typically used as red colored warning signals as defined in MIL-STD-411F; however, they are available in any of the colors referenced in Figure 17 for special applications.

Display Type A, Luminance and Color: The Type A displays have reflective white, always visible legends on an obscure black background. When illuminated the background appears in color and is discernible in daylight and does not appear energized in the unlighted mode. The average luminance exceeds 200 foot-lamberts at rated voltage, however the contrast requirements are not applicable. These displays are used in special applications and are available with background lighting in any of the colors referenced in Figure 17.

Display Type W, Luminance and Color: The Type W displays have visible black legends on a white translucent background. When illuminated the legend remains black and the background illuminates in color. The average luminance of the background exceeds 100 foot-lamberts at rated voltage and the lighting is only available in the standard colors blue, green, white, yellow or red.

LETTERING STYLES AND CHARACTER SIZES:

Display Type S, Type B and Type W: The Type S, B and W legends are Globe Condensed capitals for character sizes of 0.156", 0.125" and 0.109" in height and Alternate Gothic Condensed capitals for characters 0.072" and 0.090" in height. Custom symbols are also available.

Display Type N, Type A and Type D: The Type N, A and D legends are Futura Medium Condensed capitals for character sizes of 0.156", 0.125" and 0.109" in height and Alternate Gothic Condensed capitals for characters 0.072" and 0.090" in height. Custom symbols are also available.

VOLTAGE DIMMING CHARACTERISTICS:

Voltage Dimming: Dimming the Type S VIVISUN LED displays from daylight brightness at full rated voltage to night flying brightness is accomplished by simply reducing the applied voltage until the desired low level luminance is achieved.

Standard Dimming : All Type S colors have a uniform dimming range from 16 volts down to 10 volts as shown in Figure 18. The average display brightness for all colors is 20 ± 10 foot-lamberts at 14 VDC for the 28 VDC LED circuits as measured at 23°C.

Low Level Dimming: The Type S colors of blue, green, white and yellow used for caution and advisory signals can be dimmed to 1.0 foot-lamberts (red warning signals must remain at 15.0 foot-lamberts) as required by MIL-STD-411F for non-NVIS military aircrew stations. The average display luminance is 0.5 to 3.0 foot-lamberts at 7.2 VDC for the 28 VDC LED circuits as measured at 23°C. Figure 19 shows the dimming range.

NVIS Compatible Dimming: The Type S NVIS blue, NVIS green A, NVIS green B, NVIS white and NVIS yellow colors can be dimmed to 0.1 foot-lamberts as required by MIL-L-85762A and MIL-STD-411F for NVIS compatible military aircrew stations. The average display luminance is 0.05 to 0.3 foot-lamberts at 6.55 volts for the 28 VDC LED circuits as measured at 23°C. Figure 20 shows the dimming range.

Minimum Luminance Current: The 28 VDC LED displays require approximately 1 milliamp of current per quadrant before producing a perceptible level of luminance so the LEDs will not light inadvertently due to microamp currents.

Emergency Power Operation: The Type S displays are easily readable in emergency power conditions of 18 VDC producing in excess of 50 foot-lamberts at 18 VDC.

RELIABILITY:

Mean Time To Failure: The VIVISUN LED MTTF for the 28 VDC lighted pushbutton cap is in excess of 125,000 hours as calculated per MIL-HDBK-217F, Notice 2 for an AIF (Airborn Inhabited Fighter) environment at 60°C.

No Maintenance: The high reliability design enables the VIVISUN LED to operate virtually maintenance free for the life of the avionics platform.

No Catastrophic Failure Modes: Since each quadrant has its own electronics circuit independent of the other quadrants, any failure would result in the loss of that quadrant only while the other three quadrants would continue to function.

FIGURE 16

NORMALIZED SPECTRAL RADIANCE FOR TYPE I CLASS B NVIS COLORS

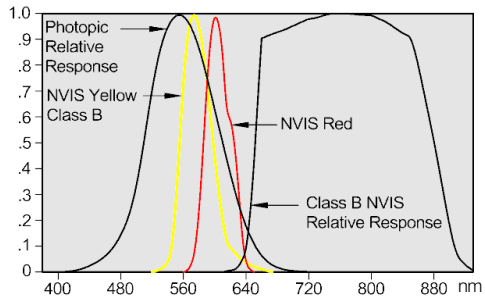

FIGURE 17

MINIMUM CONTRAST FOR SUNLIGHT READABLE DISPLAYS (TYPE S)

Color	Color Code	Contrast Φ1=Φ2=15°	Contrast Φ1=Φ2=30°	Foot-Lamberts 1/ Minimum	Typical
Blue	T	0.6	0.3	200	300
Green	G	0.6	0.4	300	400
White	A	0.6	0.4	350	450
Yellow	Y	0.6	0.4	300	400
Red	R	0.6	0.3	200	300
NVIS Blue	E	0.6	0.25	200	300
NVIS Green A	H	0.6	0.4	300	400
NVIS Green B	J	0.6	0.4	300	400
NVIS White	Q	0.6	0.4	350	450
NVIS Yellow Class A	K	0.6	0.35	300	400
NVIS Yellow Class B	U	0.6	0.35	300	400
NVIS Red	S	0.5	0.25	200	300

1/ Minimum and typical average display luminance at full rated voltage, 28 VDC.

FIGURE 18

TYPICAL VOLTAGE DIMMING RANGE AT 23°C FOR TYPE S DISPLAYS

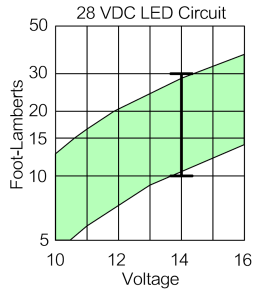

FIGURE 19

TYPICAL NON-NVIS MILITARY DIMMING RANGE AT 23°C (TYPE S)

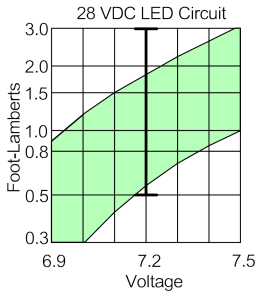

FIGURE 20

TYPICAL NVIS COMPATIBLE DIMMING RANGE AT 23°C (TYPE S)

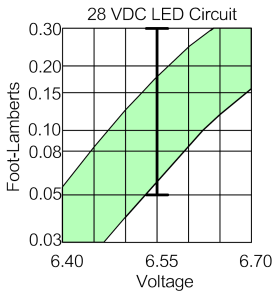

HOW TO ORDER VIVISUN LED SWITCHES

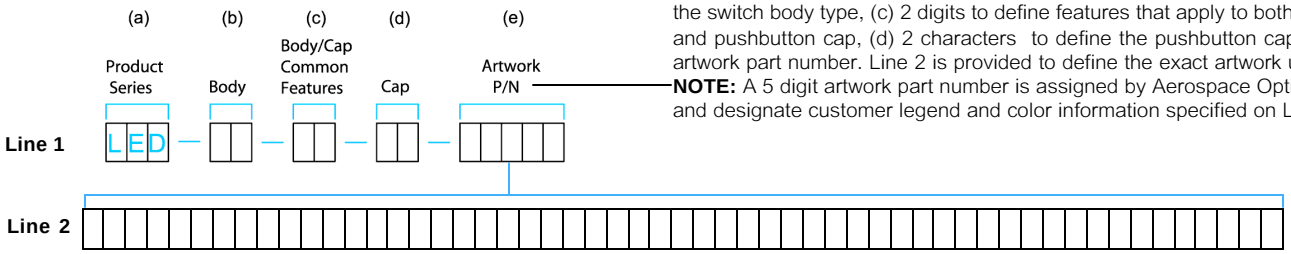

The VIVISUN LED pushbutton switches and indicators are ordered by specifying a basic 14 character part number shown on Line 1 which is comprised of (a) 3 letters to define the Aerospace Optics VIVISUN LED product line, (b) 2 characters to define the switch body type, (c) 2 digits to define features that apply to both the switch body and pushbutton cap, (d) 2 characters to define the pushbutton cap, and (e) 5 digit artwork part number. Line 2 is provided to define the exact artwork used in the cap. **NOTE:** A 5 digit artwork part number is assigned by Aerospace Optics to abbreviate and designate customer legend and color information specified on Line 2.

Line 2 provides the detailed artwork description of the legend position and type of lighting, color, character height and specific legends to be displayed within that legend position. When two or more legend positions (see Table 6) are to display legend information, a semicolon separates the legend information for each position. When two or more lines of characters (see Table 9) are to be used in one legend position the individual lines are separated by a comma.

To specify a VIVISUN LED pushbutton switch or indicator, determine the Line 1 basic part number as follows:

Step 1: Select the desired type of switch termination from Table 1. Insert the appropriate designation number into the fourth position of the basic 14 character part number.

Step 2: Select the desired switch poles and contact material from Table 2 and insert the appropriate designation number or letter into the fifth position of the basic 14 character part number.

Step 3: Select the desired enclosure design and EMI shielding option as listed in Table 3 and insert the appropriate designation number into the sixth position of the basic 14 character part number.

Step 4: Select the pushbutton actuation and LED circuit configuration from Table 4 and insert the appropriate actuation designation number into the seventh position of the basic 14 character part number.

Step 5: Select the desired pushbutton cap display style from Table 5 and insert this letter into the eighth position of the 14 character part number.

Step 6: Select the LED voltage, circuit polarity and quadrant interconnection style designation letter from Table 7 and insert this letter into the ninth position of the part number.

Step 7: Complete the Line 2 part number by using Tables 6, 8, 9 and the order example page.

The bottom of each pushbutton cap is marked with the applicable quadrant activation circuit diagram from Table 10 and illustrated on the part number example page under the heading Pushbutton Cap Part Marking. The diagram shows the internal circuit configuration (single circuit or horizontal split circuit), the voltage, the circuit polarity and the inputs necessary to energize the LEDs in each quadrant.

TABLE 1 Terminations

Termination Type	Switch Poles	Type	Designation
Solder Terminals			
Turret	1 and 2 Pole or Indicator	I & II	1
Spade	1 and 2 Pole or Indicator	I & II	2
Wire wrap	1 and 2 Pole or Indicator	I & II	3
Solderless QUIK-CONNECT™ Common Termination System (CTS)	1 and 2 Pole or Indicator	III & IV	4
Solderless QUIK-CONNECT™ Common Termination System (CTS)	4 Pole Only	V & VI	6

Note: The solderless QUIK-CONNECT™ (CTS) designation number 4 is used to order a single pole or a 2 pole switch or indicator body portion only. The number 6 is used to order a 4 pole switch body portion only. The QUIK-CONNECT™ plug is ordered separately for convenience to permit wire harness manufacture without the necessity of having the switch/indicator body. The QUIK-CONNECT™ plug is ordered as P/N 18-200 for 1 or 2 pole switches or indicators and P/N 18-240 for 4 pole switches.

TABLE 2 Switch Poles and Contact Material

Switch Poles	Contact Material: Silver	Contact Material: Gold Plate
SPDT-SB	1	5
DPDT-SB	2	6
SPDT-DB	3	7
DPDT-DB	4	8
4PDT-SB (Type V & VI)	A	F
4PDT-DB (Type V & VI)	C	H
Indicator (Type I, II, III, & IV Only)	0	

TABLE 3 Enclosure Design and EMI

1 - Unsealed
2 - Dripproof/Watertight/Splashproof
3 - Dripproof, etc. with High Impact Shock
4 - Unsealed with EMI Shielding per MIL-PRF-22885F
5 - Dripproof/Watertight/Splashproof with EMI Shielding per MIL-PRF-22885F
6 - Dripproof, etc. with High Impact Shock and EMI Shielding per MIL-PRF-22885F

TABLE 4 Pushbutton Actuation and LED Circuit Configuration

LED Circuit Configuration: Style	Description	Block Diagram	Actuation Designation: Momentary	Alternate *	Indicator
1	Single Circuit, One Common	G	1	4	7
2	Horizontal Split Circuit, Two Commons	F G	2	5	8

* High Impact Shock is not avaiable in Alternate Action

TABLE 5 Pushbutton Cap Display Styles

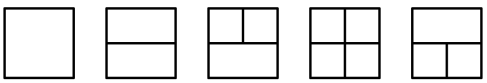

	H	B	C	D	E
Standard Designation	H	B	C	D	E
NVIS Designation	S	K	L	M	N

TABLE 6
Legend Positions and Display Type Lighting

Display Type S: Sunlight readable legends on an opaque black background that are indiscernable until illuminated. When illuminated the legends appear in color.
Display Type N: Visible white legends on an opaque black background. When illuminated the legends produce 0.5 to 3.0 foot-lamberts at rated voltage.
Display Type B: Black legends on an obscure black background. When illuminated the legend remains black and the background appears in color.
Display Type A: Always visible white legends on an obscure black background. When illuminated the background appears in color.
Display Type D: Visible white legends on an opaque black background. When illuminated the legends light in color producing over 100 foot-lamberts at rated voltage. Type D displays are only available in blue, green, white, yellow or red.
Display Type W: White background with visible black legends. When illuminated the legend remains black and the background appears in color producing over 100 foot-lamberts at rated voltage. Available only in Table 5 cap styles H and B wherein both B style positions must be Type W and in the colors blue, green, white, yellow or red only.

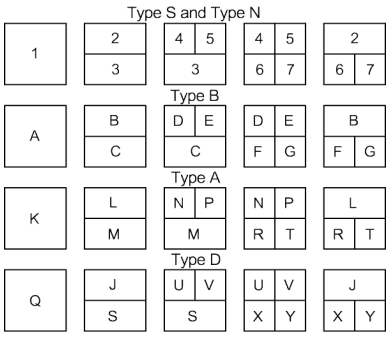

TABLE 7
LED Voltage, Circuit Polarity and Quadrant Interconnection Style

Number Of Input Wires Excluding Commons G & F	Quadrant Interconnections Block Diagram	Description	Voltage, Cicuit Polarity and Designation Code 28 VDC Common Anode	28 VDC Common Cathode
4	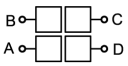	Four inputs, all four quadrants independent	A	F
2	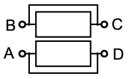	Two inputs, top quadrants coupled and bottom quadrants coupled	B	G
3	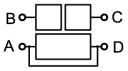	Three inputs, only bottom two quadrants coupled	C	H
3	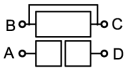	Three inputs, only top two quadrants coupled	D	J
1	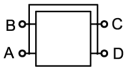	One input, all four quadrants connected	E	K

Note: Diagrams are as viewed from the front of the display.

TABLE 8
Color

T - Blue
G - Green
A - White (Illuminant B, 4780°K)
Y - Yellow
R - Red
Q - NVIS White
E - NVIS Blue
H - NVIS Green A
J - NVIS Green B
K - NVIS Yellow Class A
U - NVIS Yellow Class B
S - NVIS Red
D - Type N visible white with white night legend lighting (Futura)
N - Type N visible white with red night legend lighting (Futura)
F - Type N visible white with NVIS Green A night legend lighting (Futura)
L - Type N visible white with NVIS Green B night legend lighting (Futura)
X - Type N visible white with NVIS White night legend lighting (Futura)

TABLE 9
Character Capacity per Legend Position

Character Size	Character Height	Lines Characters	Legend Position per Table 6: 1-A-K Q-W	2-3-B-C-L M-J-S-I-O	4-5-6-7-D-E-F-G N-P-R-T-U-V-X-Y
1[1]	.125"	**Lines Per Position**	**3**	**1**	**1**
		Characters Per Line	6	6	3
2[1]	.109"	**Lines Per Position**	**3**	**1**	**1**
		Characters Per Line	7	7	3
3	.072"	**Lines Per Position**	**5**[2]	**2**	**2**
		Characters Per Line	8[3]	8[3]	4[3]
4	.156"	**Lines Per Position**	**2**	**1**	**1**
		Characters Per Line	4	4	2
A	.090"	**Lines Per Position**	**4**[2]	**2**[2]	**2**[2]
		Characters Per Line	7[3]	7[3]	3[3]
0	—	Custom Symbols			

Character Size	Character Height	Lines Characters	Legend Position per Table 6: 2-3-B-C-L M-J-S-I-O	4-5-6-7-D-E-F-G N-P-R-T-U-V-X-Y
5[4]	.125"	**Lines Per Position**	**3**	**1**
		Characters Per Line	1	3
6[4]	.109"	**Lines Per Position**	**3**	**1**
		Characters Per Line	1	3
7[4]	.072"	**Lines Per Position**	**5**[2]	**2**
		Characters Per Line	3	3
8[4]	.156"	**Lines Per Position**	**2**	**1**
		Characters Per Line	1	2
B[4]	.090"	**Lines Per Position**	**4**[2]	**2**[2]
		Characters Per Line	3[3]	3[3]
9[4]	—	Custom Symbols		

Notes:
1. Visible white legends using Futura Medium Condensed lettering (Type N, A and D per Table 6) have one less character per line for character sizes 1 and 2.
2. The .072" and .090" high characters have one less line per position for Type A, B and W per Table 6.
3. The .072" and .090" high characters have one less character per line for Type A, B and W per Table 6.
4. Designations 5, 6, 7, 8, 9 and B are used to denote legends arranged so as to appear upright when the switch is rotated 90° clockwise.

TABLE 10
Quadrant Activation Circuit Diagrams

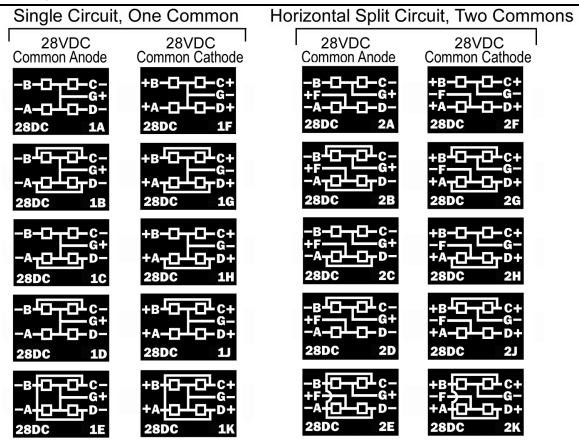

Notes:

1. Diagrams are as viewed from the front of the display and are marked on the bottom of each pushbutton cap. (See part number example page 15)

2.The two character identifiers 1A, 1B etc. identify the quadrant interconnection styles as shown in Figure 10 on page 10.

PART NUMBER EXAMPLES

The following four examples are solderless QUIK-CONNECT™ CTS, 2 pole switches having single break silver contacts with gold flash and are unsealed, alternate action.

Legends Off

Legends Energized

	In Sunlight	In Nighttime Ambient	In Sunlight	In Sunlight
Features	■ Single circuit, one common ■ E style pushbutton cap display ■ 28 VDC, common anode ■ 4 input wires required, 3 for the quadrants plus 1 common ■ Type S white legend in position 2 ■ Type S green legend in position 6 ■ Type S blue legends in position 7 ■ Character size 1, height 0.125”	■ Horizontal split circuit, 2 commons ■ K style pushbutton cap display ■ 28 VDC, common anode ■ 4 input wires required, 2 for the quadrants plus 2 commons ■ Type N visible white legend with NVIS green B night lighting in position 2 ■ Type S NVIS green B symbol in position 3 ■ Character size 3, height 0.072”	■ Single circuit, one common ■ H style pushbutton cap display ■ 28 VDC, common anode ■ 2 input wires required, 1 for the quadrants plus 1 common ■ Type B black legend with yellow background lighting in position A ■ Character size 1, height 0.125”	■ Single circuit, one common ■ B style pushbutton cap display ■ 28 VDC, common anode ■ 3 input wires required, 2 for the quadrants plus 1 common ■ Type A visible white legend with green background lighting in position L ■ Type S red legend in position 3 ■ Character size 1, height 0.125”
Part Number	LED-42-14-ED-30000 (2A1 SELECT; 6G1 ON; 7T1 OFF)	LED-42-15-KB-30001 (2L3 HF AUDIO, XFER; 3J0 ////)	LED-42-14-HE-30002 (AY1 WEAPON, STBY)	LED-42-14-BB-30003 (LG1 POWER; 3R1 FAIL)

NOTE: The part number examples shown above do not include the 2 Pole solderless QUIK-CONNECT™ plug which must be ordered separately.

1. To order the 2 Pole solderless QUIK-CONNECT™ plug specify P/N 18-200. The QUIK-CONNECT™ plug is supplied with sealing plugs for installation in any unused locations.
2. To order an extraction tool for removing the 2 Pole solderless QUIK-CONNECT™ plug specify P/N 18-234.

For Ordering Assistance
Call 1-888-VIVISUN
e-mail:switches@vivisun.com
Website: www.vivisun.com

VIVISUN LED
Termination (per Table 1) Note: Designation 4 requires separate ordering of mating 2 Pole solderless QUIK-CONNECT™ plug P/N 18-200.
Switch Poles & Contact Material (per Table 2)
Enclosure & EMI (per Table 3)
Actuation & LED Circuit Configuration (per Table 4)
Pushbutton Cap Display Style (per Table 5)
LED Voltage, Circuit Polarity and Quadrant Interconnection Style (per Table 7)
Artwork Part Number assigned by Aerospace Optics at time of customer request

LED — 42 — 15 — KB — 3001

(2L3 HF AUDIO, XFER; 3J0 ////)

Parenthesis to start artwork description
Legend position and type lighting per Table 6
Color or Type N color per Table 8
Character size per Table 9
Legend on first line “HF AUDIO”
Insert comma between first and second lines
Legend on second line “XFER”
Insert semicolon between legend positions
Legend position and type lighting per Table 6
Color or Type N color per Table 8
Character size per Table 9 NOTE: Code 0 and 9 designate non-standard symbols
Legend on first line “////”
Parenthesis to denote end of artwork
NOTE: For repeat orders of the switch, only the 14 character part number on line 1 is required.

HOW TO ORDER SPARE COMPONENTS

1. To order a typical spare VIVISUN LED pushbutton cap only (from example above):

   LED — XX — 15 — KB — 30001

   Insert X’s in body type spaces to denote pushbutton cap only.
2. To order a typical spare VIVISUN LED 2 pole solderless QUIK-CONNECT™ body only (from example above):

   LED — 42 — 15
3. To order a spare 2 pole solderless QUIK-CONNECT™ plug only specify 18-200 (from example above).
4. If a 4 pole body had been in the above example, then a 4 pole solderless QUIK-CONNECT™ plug would be ordered by specifying P/N 18-240 (extraction tool P/N 18-234).
5. To order an indicator solderless QUIK-CONNECT™ plug specify 18-200.

Pushbutton Cap Part Marking

Top View
P/N and Date Code

Side View
(NVIS Only) Type and Class

Bottom View
Circuit Diagram

VIVISUN LED

The Complete Switch™

High Reliability- Highly reliable LED lighting provides life-of-the-platform service life.
Maintenance Free Operation- LED lighting eliminates replacing failed incandescent lamps.
Voltage Dimming- Comparable to incandescent lamp voltage dimming.
A Spectrum™ of Colors- Five Standard colors, including white and six NVIS colors.
Sunlight Readable- Displays are readable in 10,000 foot-candles.
NVIS Compliant- Meets the requirements of MIL-L-85762A, MIL-STD-3009 and JSSG-2010-5.
Low Power- Requires less than half the power needed for incandescent lamps.
Low Touch Temperature- Face cap temperature does not exceed 120° F at 72° F.
Rugged Design- Qualified to MIL-PRF-22885/108 and listed on QPL 22885.
Electrical Environment- Meets the electrical environmental requirements of RTCA/DO-160D.

The Aerospace Optics, Inc. commitment to quality:

We will strive to ensure total customer satisfaction.
We will meet the quality needs and expectations of our customers.
We will provide defect-free products and outstanding customer service.
We will assure on-time delivery and product value.

ISO 9001 Registered- **Our Quality Assurance System is ISO 9001 Registered.**

VIVISUN®™

See it. Believe it.™

ISO 9001
DNV
DNV Certification, Inc.
REGISTERED FIRM

3201 Sandy Lane, Fort Worth, Texas, 76112 Tel:1-888-VIVISUN E-Mail:switches@vivisun.com Website:http://www.vivisun.com

VIVISUN®™

See it. Believe it.™

VIVISUN LED

The Complete Switch™

AEROSPACE OPTICS, INC.
3201 Sandy Lane, Fort Worth, TX 76112
Toll Free: 1-888-VIVISUN
Fax: (817) 654-3405
E-Mail: switches@vivisun.com
Website: www.vivisun.com

Data Sheet No. LED-12-2001-04 Rev. B

Ó **2002 Aerospace Optics, Inc. Patented and Patents Pending**

The Aerospace Optics Logo, See it. Believe it., Spectrum and The Complete Switch are all trademarks of Aerospace Optics, Inc. with registration pending.